VD12

DIRECTIONAL CONTROL VALVE

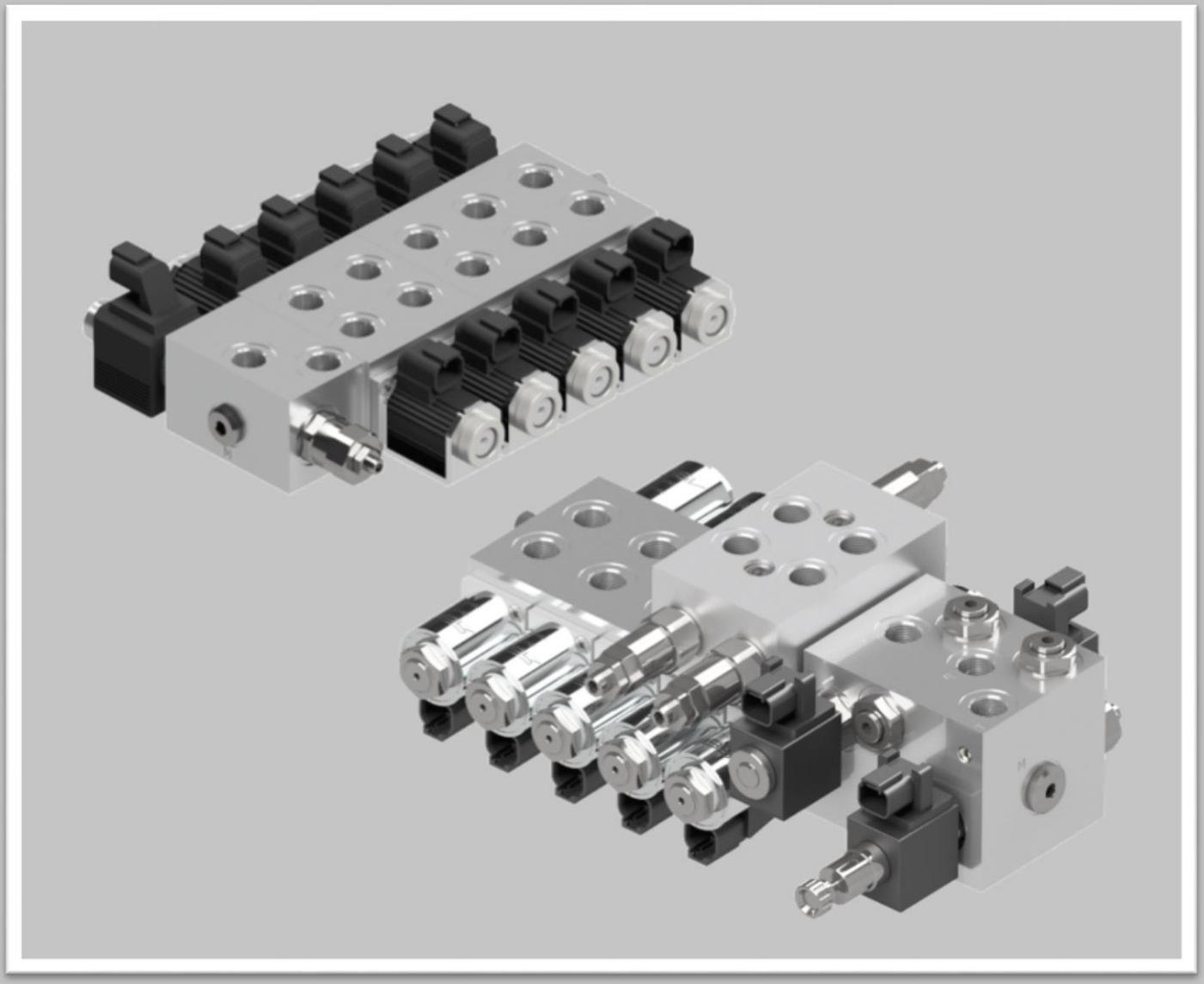

VBR HYDRAULICS

VD12

MAIN FEATURES

- Direct acting with pull-type ON/OFF solenoid
- Compact design
- Product with wide customization options
- Designed with parallel connection
- Push pin manual override
- Wide range of spool types
- Wide range of auxiliary function for each working section
- Special ports dimensions available on request

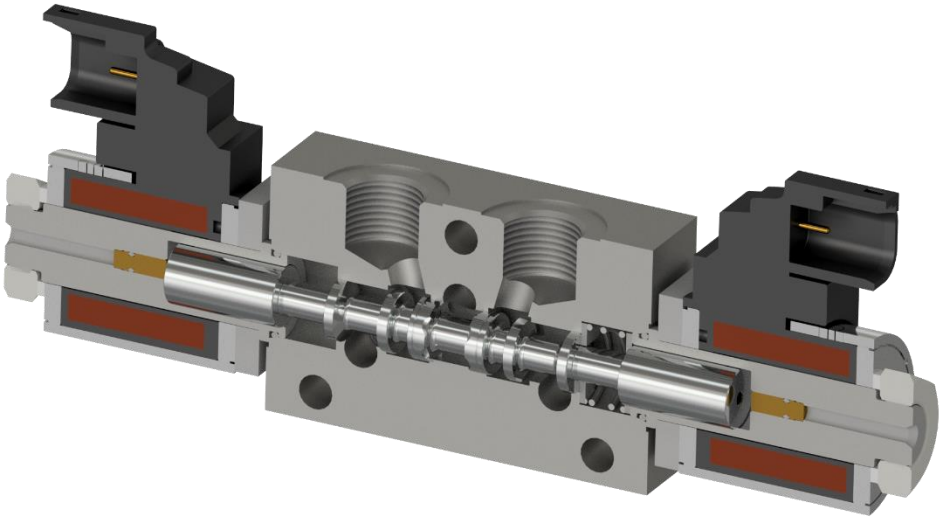

TECHNICAL SPECIFICATION

Max flowrate on working ports	Up to 35	*l/min*
Max working pressure	250	*bar*
Max back pressure on T line	30	bar
Ambient temperature range	-20 / +50	*°C*
Fluid temperature range	-20 / +90	*°C*
Fluid viscosity range	10 ÷ 200	*cSt*
Fluid contamination degree	18/16/13	*ISO4406*
Materials	Inlet: Alluminum or Steel Zinc plated Working section: Cast Iron Zinc plated	
Port dimensions	G1/4 - G3/8 - SAE6 – RRM…	
Nominal voltage	12 / 24	*VDC*
Coil power	20,5	*W*
Connector type	DT04-2P, AMP-JPT, DIN	

Note: technical specification measured with mineral oil 46cSt @ 40°C

DIMENSIONS

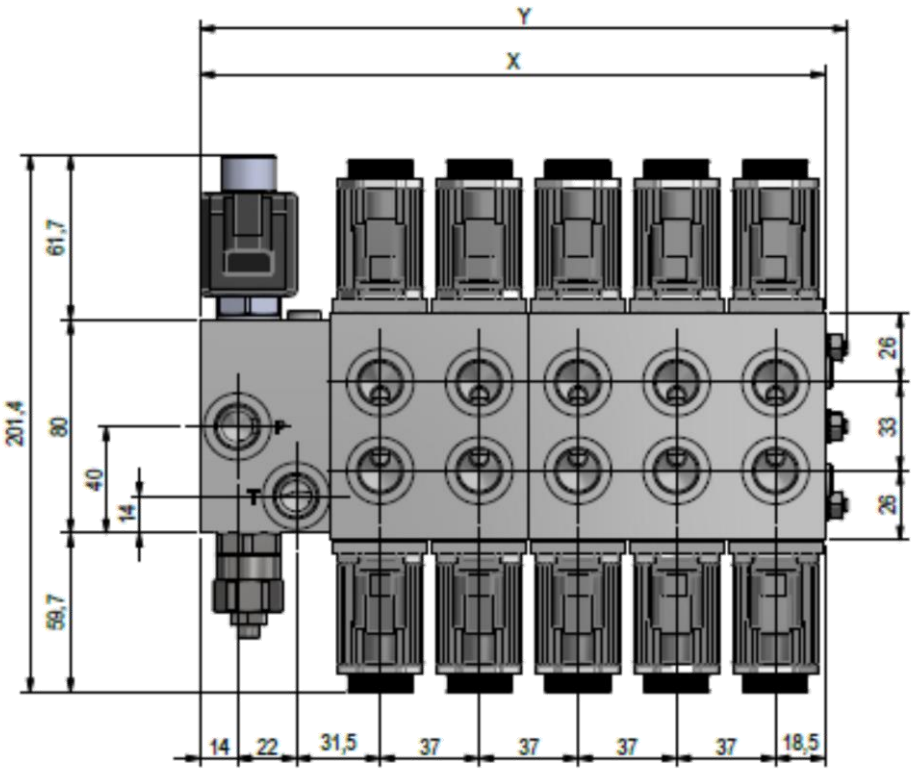
Y
X
61,7
201,4
80
40
14
59,7
26
33
26
P
T
14
22
31,5
37
37
37
37
18,5

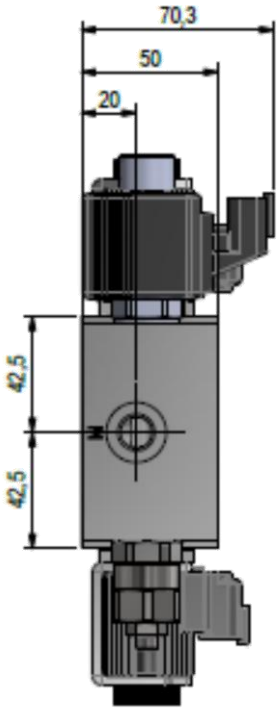
70,3
50
20
42,5
42,5

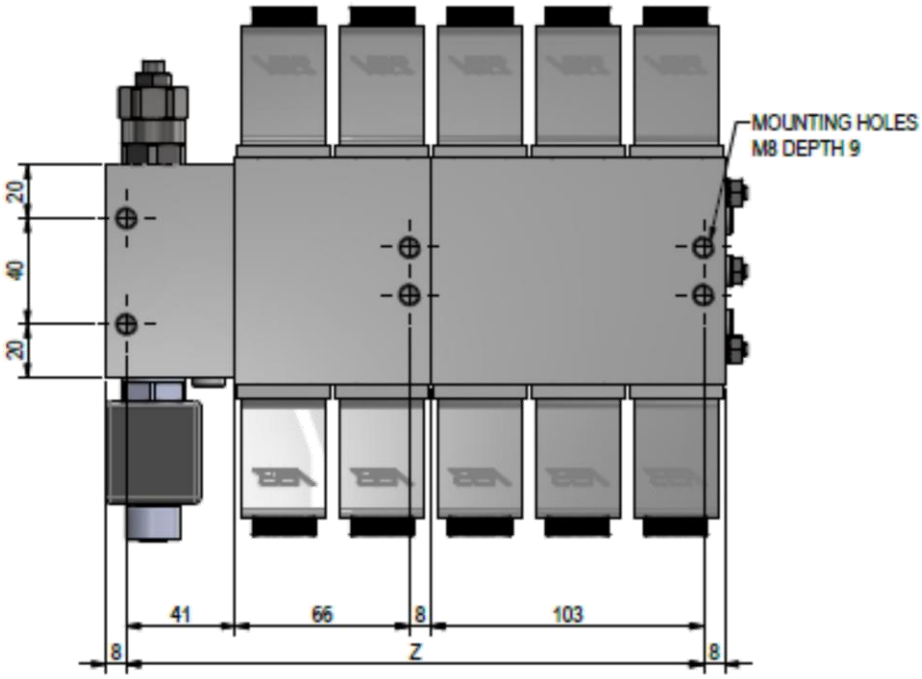
MOUNTING HOLES
M8 DEPTH 9
20
40
20
41
66
8
103
8
Z
8

WORKING SECTION	A TYPE INLET SECTION			A1 TYPE INLET SECTION			B TYPE INLET SECTION			C TYPE INLET SECTION		
	X [mm]	Y [mm]	Z [mm]	X [mm]	Y [mm]	Z [mm]	X [mm]	Y [mm]	Z [mm]	X [mm]	Y [mm]	Z [mm]
\2	123	130,6	107	98	105,6	84	153	160,6	74	174	181,6	101
\3	160	167,6	144	135	142,6	121	190	197,6	111	211	218,6	138
\4	197	204,6	181	172	179,6	158	227	234,6	148	248	255,6	175
\5	234	241,6	218	209	216,6	195	264	271,6	185	285	292,6	212
\6	271	278,6	255	246	253,6	232	301	308,6	222	322	329,6	249
\7	308	315,6	292	283	290,6	269	338	345,6	259	359	366,6	286
\8	345	352,6	329	320	327,6	306	375	382,6	296	396	403,6	323

ORDERING DESCRIPTION

VD12 / 5 / A - G38 - 210 - E / S - G38 - 1 / S - G38 - 1 / S - G38 - 2 / S - G38 - 2 / S - G38 - 2 / 12 - DT

1 2 3 4

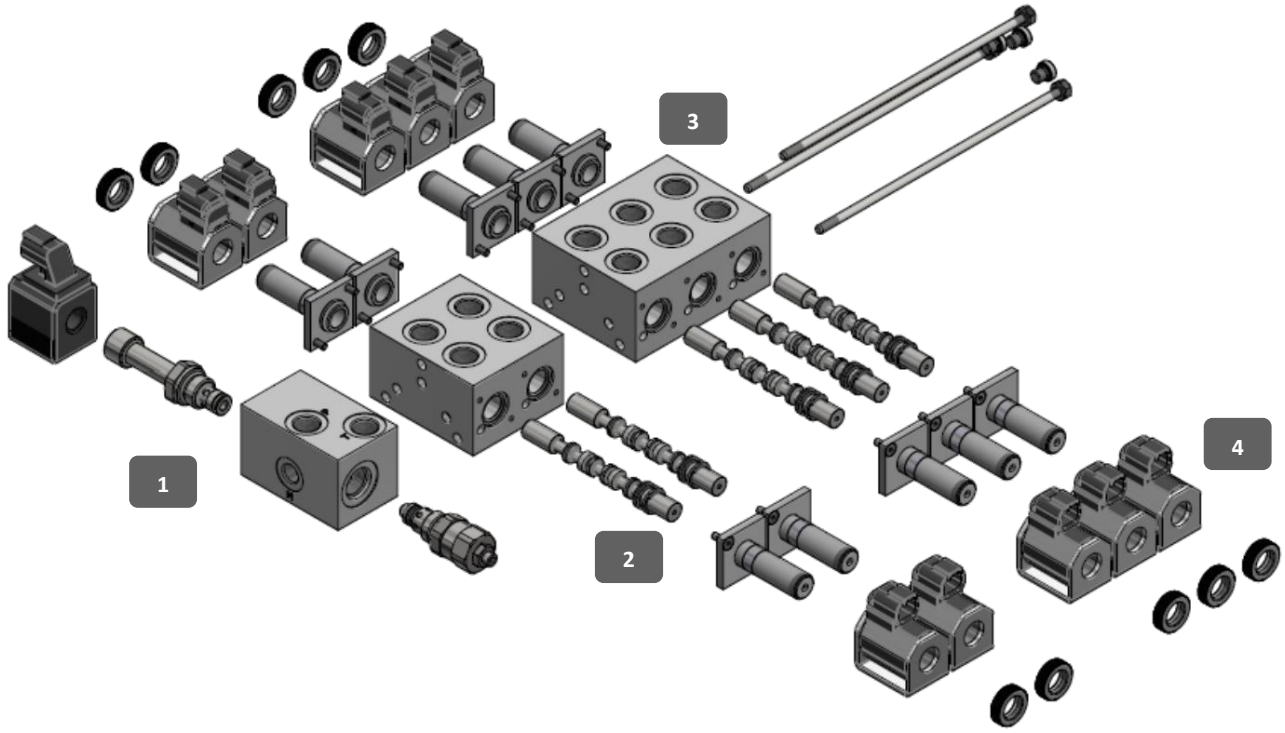

Hydraulic diagram

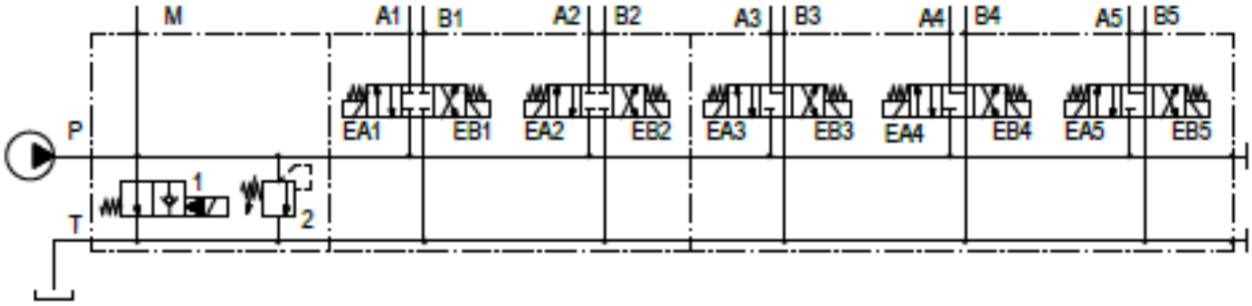

ORDERING EXAMPLE DESCRIPTION

INLET SECTION | FIRST WORKING SECTION | OTHER WORKING SECTION

VD12 / 5 / B - G38 - 210 - E / S - G38 - 1 - V . A . 150 - S / ... / 12 - DT

Directional Control Valve

Nr of working sections

Inlet section type:
A: standard
A1: compact
B: with proportional flow control valve
C: with simple effect control
D: double proprotional control valves
Z: custom

Port dimensions:
G14: BSP G1/4
G38: BSP G3/8
S06: UN-UNF SAE6

Main relief valve pressure setting

E: with Solenoid Unloader valve
EP: with Solenoid Unloader valve with push pin override
ES: with Solenoid Unloader valve with screw override

Port type:
L: side port
S: upper port

Port dimensions:
G14: BSP G1/4
G38: BSP G3/8
S06: UN-UNF SAE6

Spool type:
1: A and B closed in central position (CC)
2: A and B to Tank in central position (OC)
3A: A closed and B to Tank in central positiom
3B: B closed and A to Tank in central positiom
6A: A and B to Tank in central position + Regenrative to A
6B: A and B to Tank in central position + Regenrative to B
(Other spool type on request)

Coil connection:
DT: Deutsch DT04-2P
DI: DIN 43650
AJ: AMP Junior Timer

Coil Type:
12: 12 VDC
24: 24 VDC

Manual Overraide Type:
S: standard
P: push button
L: manual lever

Auxiliary function valve pressure setting

Port of Auxiliary function:
2: A and B
A: on port A
B: on port B

Auxiliary function:
A: Anticavitaion valve
B: Pilot operated check valve
L: Relief valve
V: Relief and anticavitation valve
U: Unloading valve
O: Overcenter valve
(Other function on request)

A Type Inlet Section

Inlet section with pressure relief valve and unloading valve

- P and T ports BSP G3/8”
- M Pressure gauge BSP G1/4”
- Aluminum body
- Manual adjustment pressure relief valve
- Unloading valve

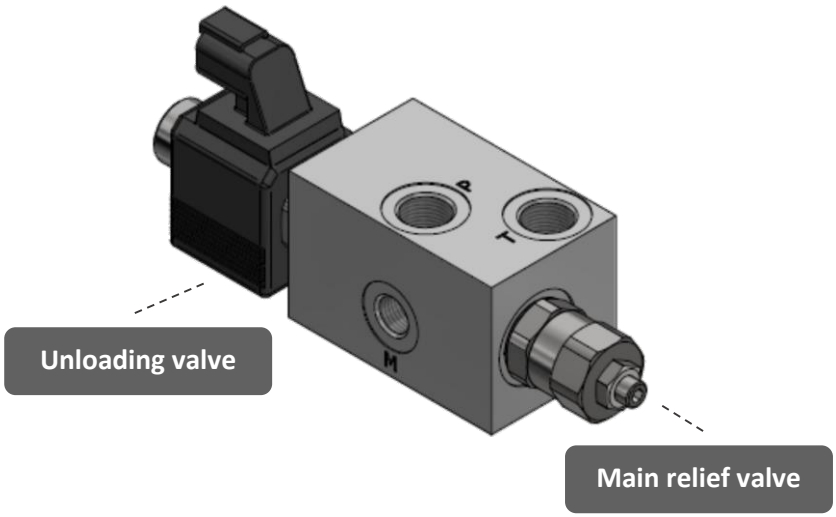

Hydraulic diagram

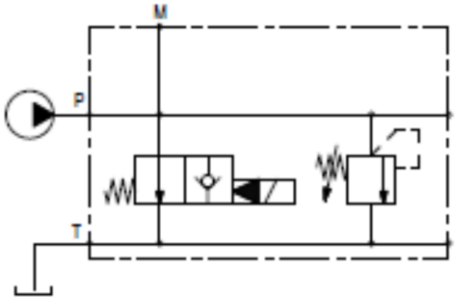

Dimensions

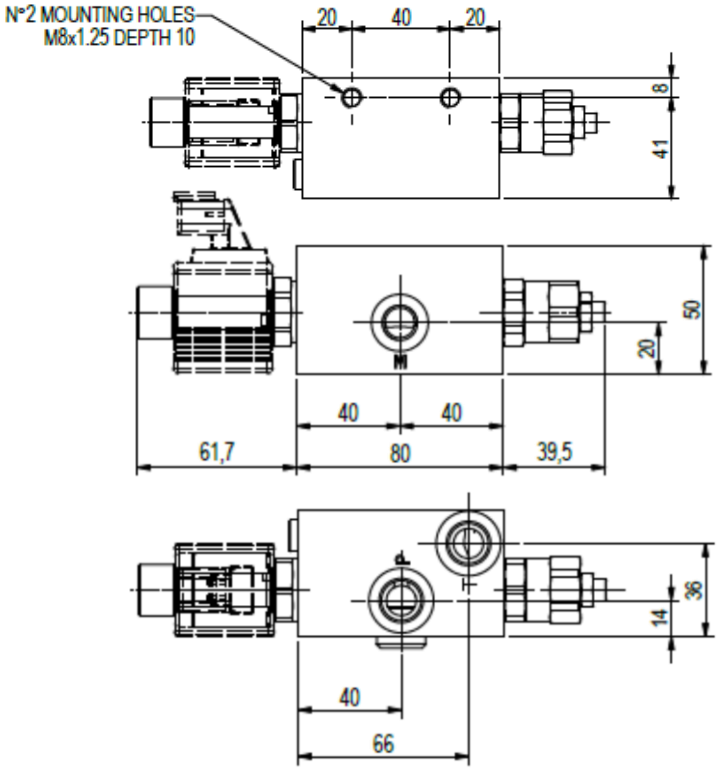

VD12

A1 Type Inlet Section

Inlet section with compact design

- P and T ports BSP G3/8”
- M Pressure gauge BSP G1/4”
- Aluminum body

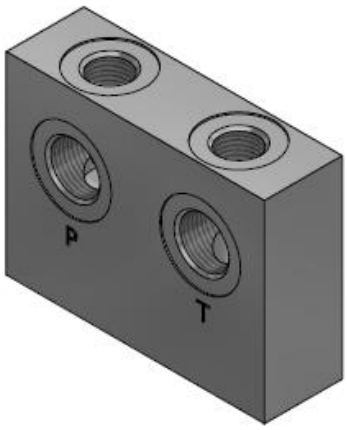

Hydraulic diagram

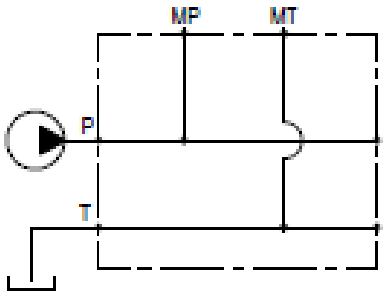

Dimensions

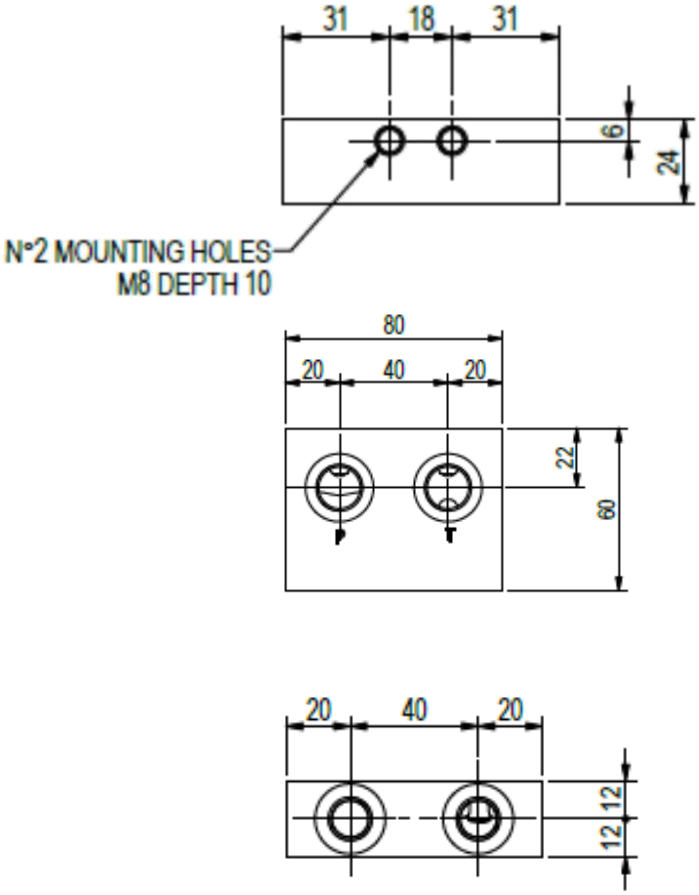

VD12

B Type Inlet Section

Inlet section with LS line and proportional pressure compensated flow regulator

- T2 port BSP G1/2”
- P1, P2, T1, T3 ports BSP G3/8”
- M and LS ports BSP G1/4”
- Aluminum body
- Pressure compensator stand-by 11 bar
- Manual adjustment pressure relief valve
- Orifice LS bleeding
- Unloading valve

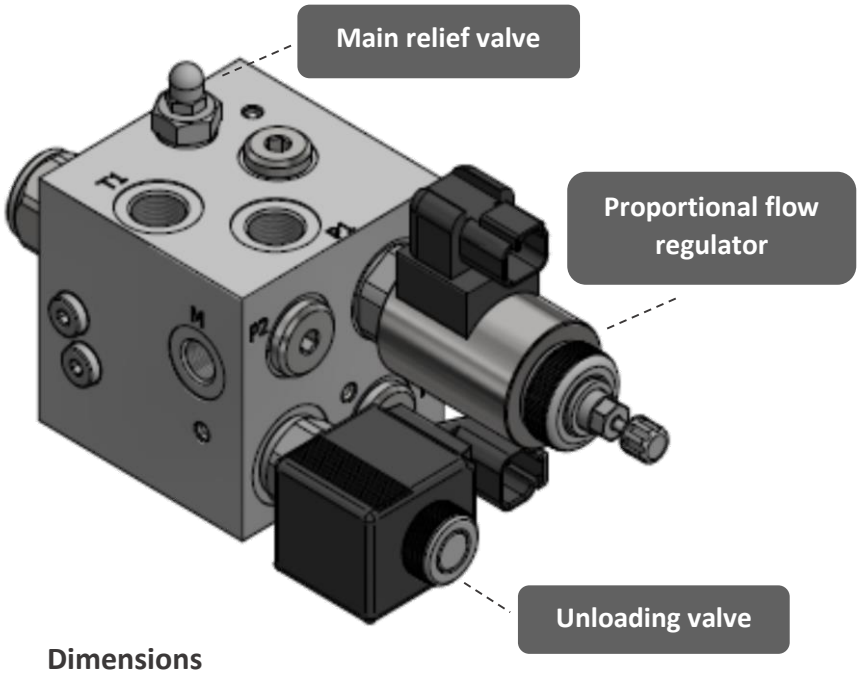

Hydraulic diagram

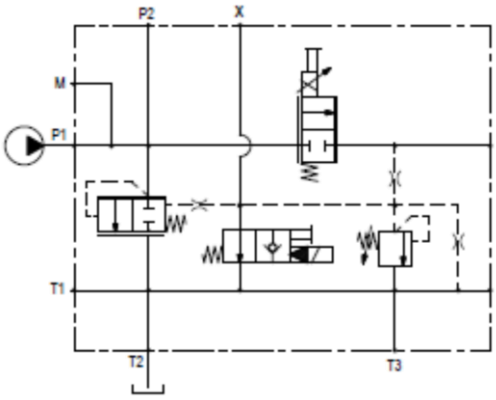

Dimensions

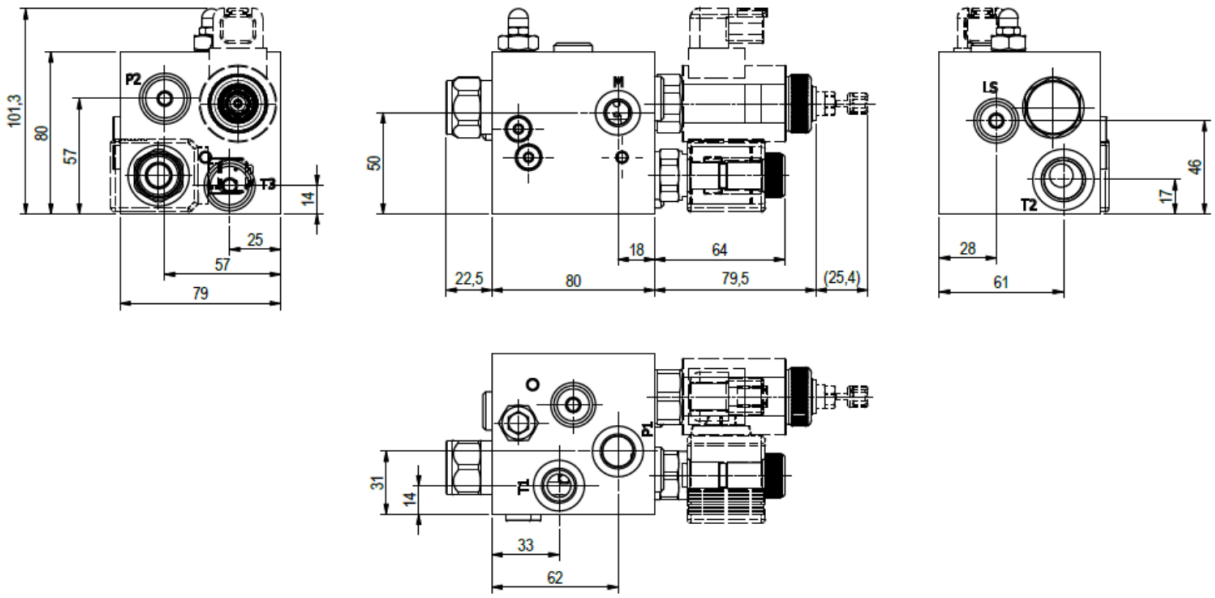

VD12

Customized Inlet Sections

C type

Inlet section with control for single effect actuator

- P, S and T ports BSP G3/8”
- M Pressure gauge BSP G1/4”
- Aluminum body
- Manual adjustment pressure relief valve
- Unloading valve

Hydraulic diagram

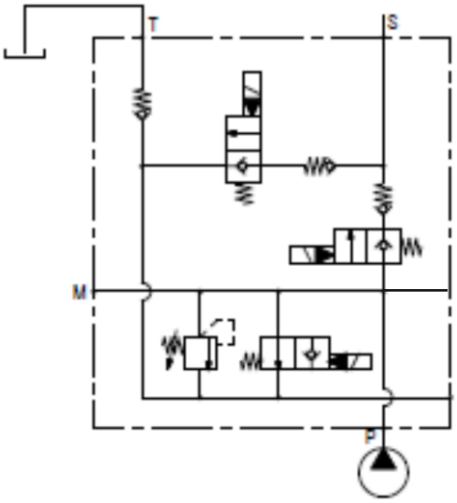

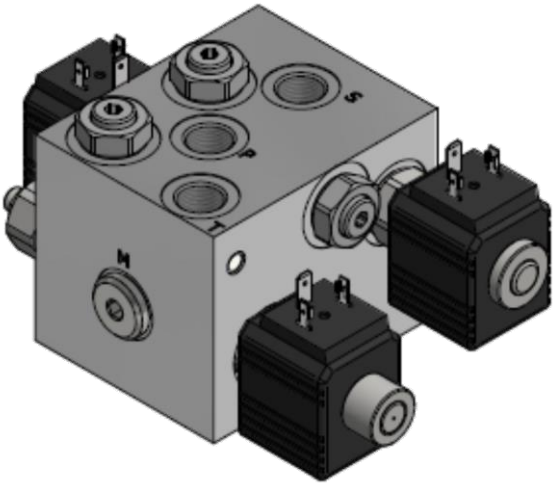

Dimensions

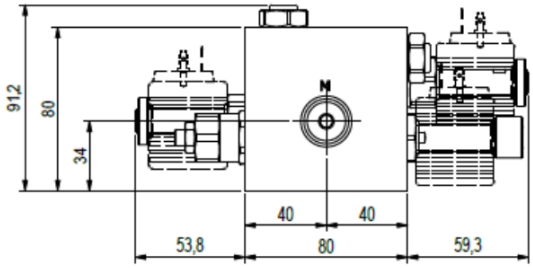

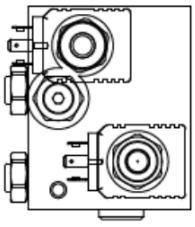

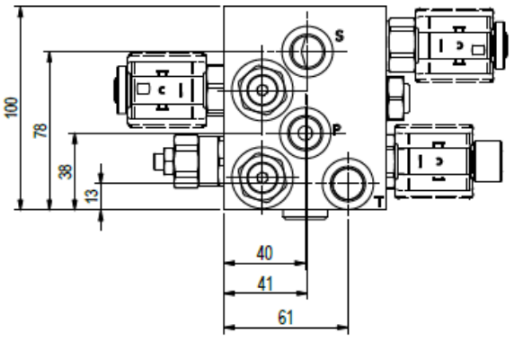

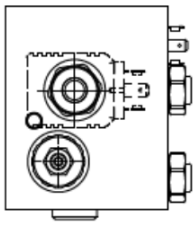

VD12

D type

Inlet section with LS line and double proportional pressure pre-compensated flow regulator

- P and T ports BSP G1/2”
- M and LS port BSP G1/4”
- Aluminum body
- Pressure compensator stand-by 11 bar or 16 bar
- Manual adjustment pressure relief valve
- Orifice LS bleeding
- Unloading valve

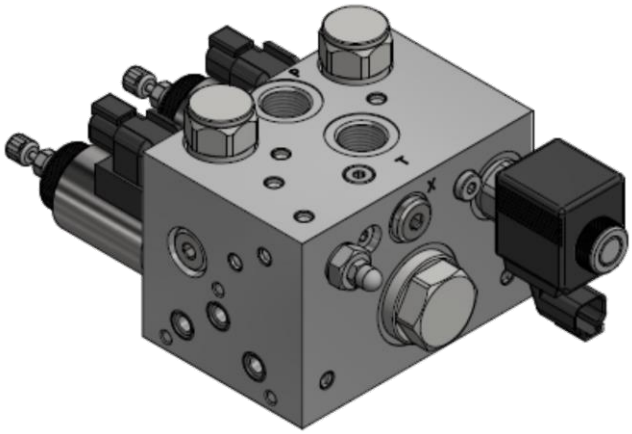

Hydraulic diagram

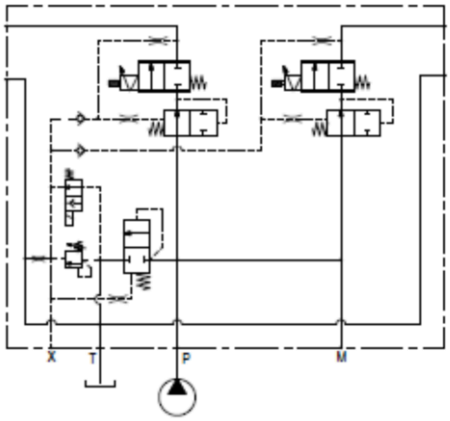

Dimensions

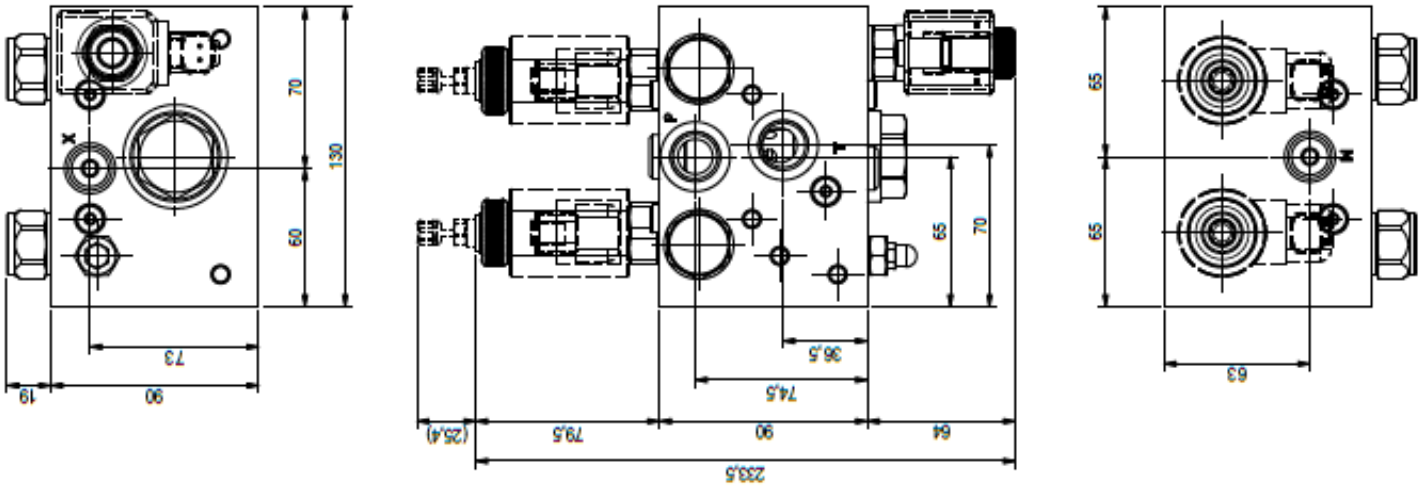

WORKING ELEMENTS

- A and B ports BSP G3/8” or G1/4”
- Direct acting with PULL type on/off solenoid
- Cast iron body
- Available with 2 or 3 working sections
- Available with different manual override

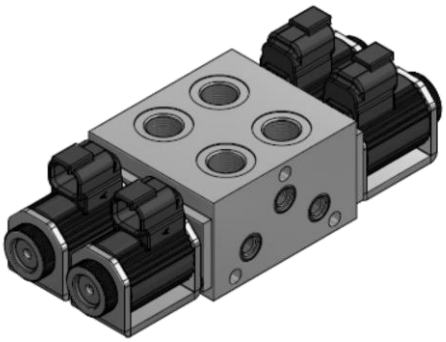

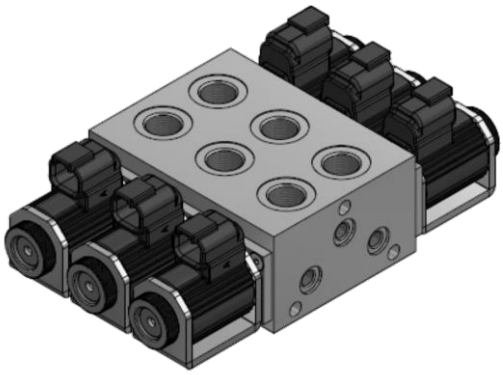

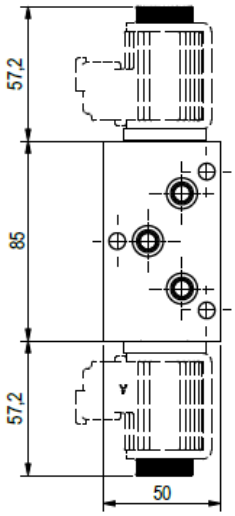

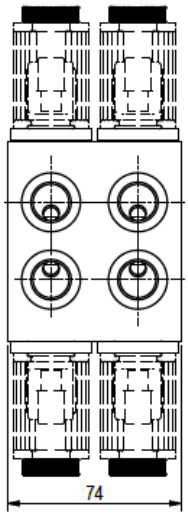

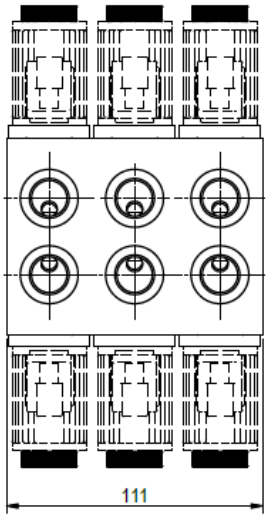

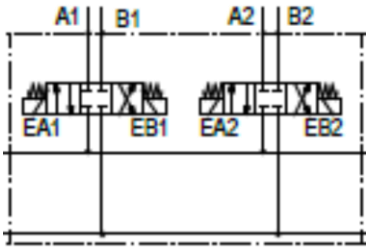

SPOOLS

Type 1 A&B closed in central position

Type 2 A & B to tank in central position

Type 3A/3B A closed and B to Tank or B closed and A to tank in central position

Type 6A/6B A and B closed in central position and regenerative function in pos. 1 or 2

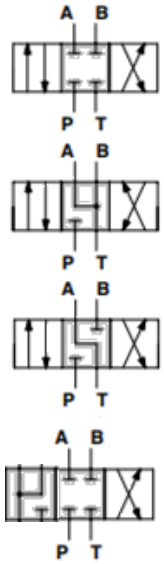

Other special spool types available on request

Spool pressure drop

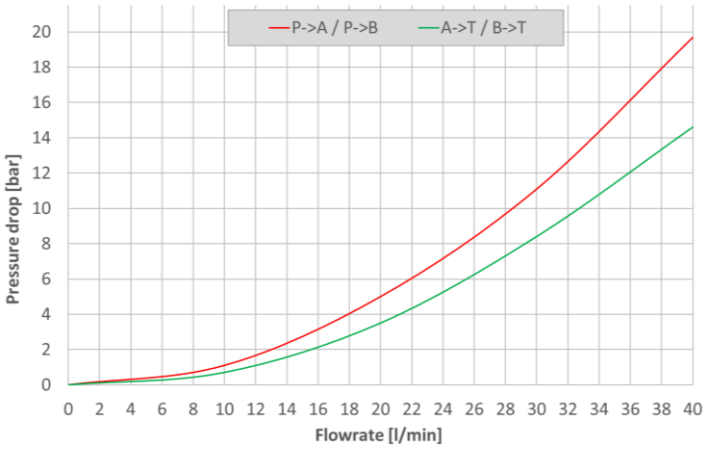

Operating limits

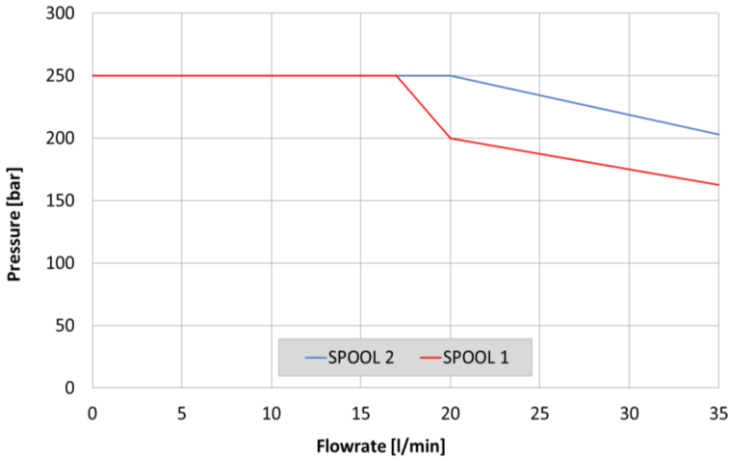

OVERRIDE

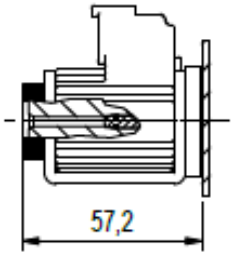

S standard type: push pin override

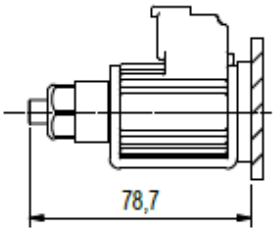

P type: push button override

SA outlet cover with pressure relief valve

- Manual adjustment pressure relief valve
- A and T ports BSP G 3/8”
- MA port BSP G1/4”
- Aluminum body

Other options available on request

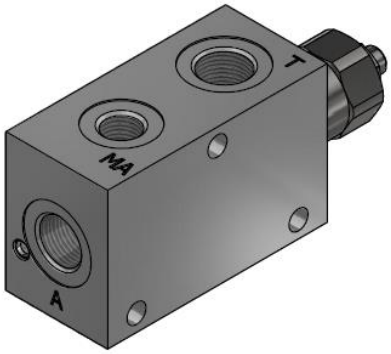

Hydraulic diagram

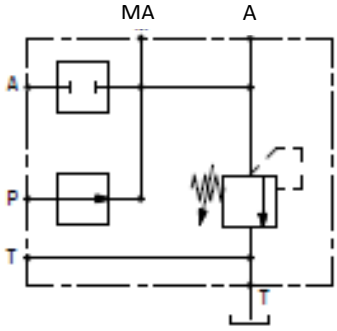

Dimensions

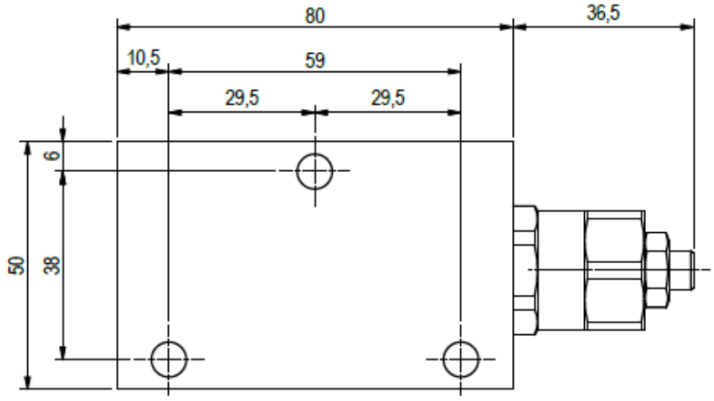

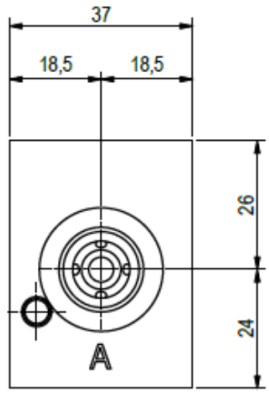

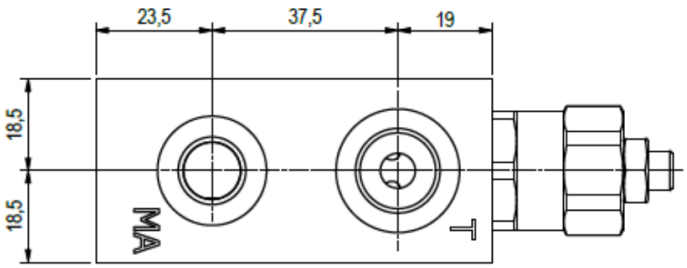

MAIN RELIEF VALVES

Valves for A, C and SA covers

Standard main relief valve

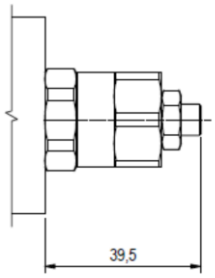

Anti tampering cap **(A)**

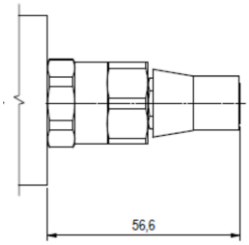

Handknob **(K)**

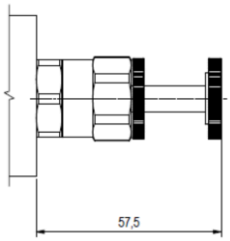

Valves for B and D covers

Standard main relief valve

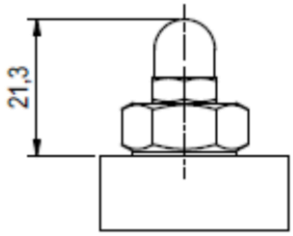

Pressure drop characteristics

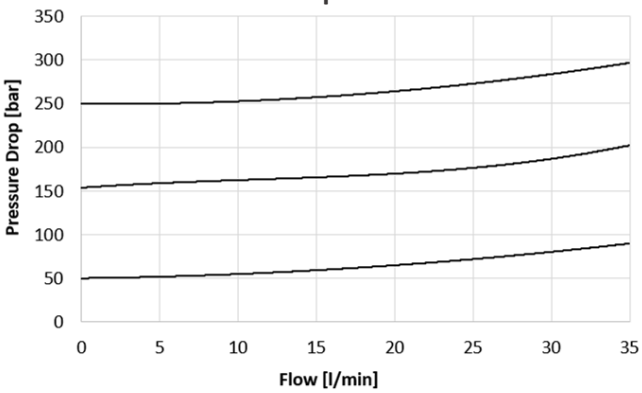

UNLOADING VALVES

Standard unloading valve **(E)**

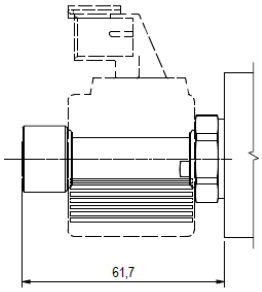

With push pin override **(EP)**

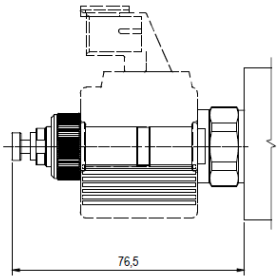

With screw override **(ES)**

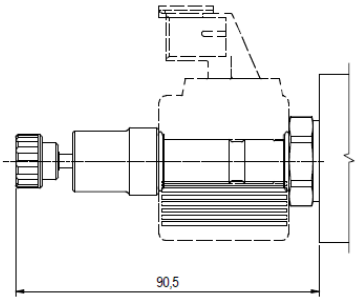

Pressure range characteristics

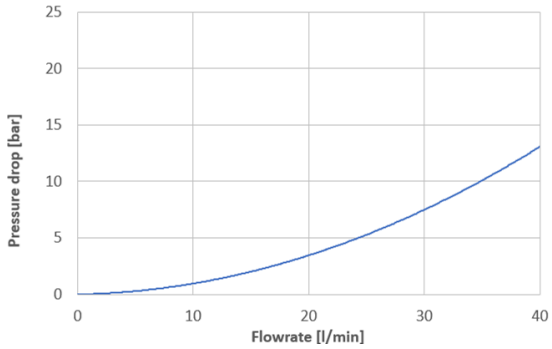

PROPORTIONAL FLOW REGULATOR

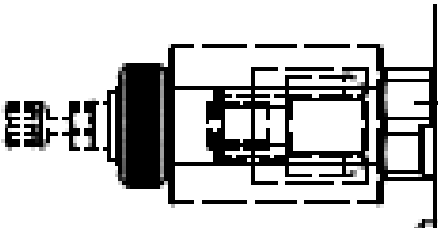

- Available with or without screw override
- Other flow characteristics on request

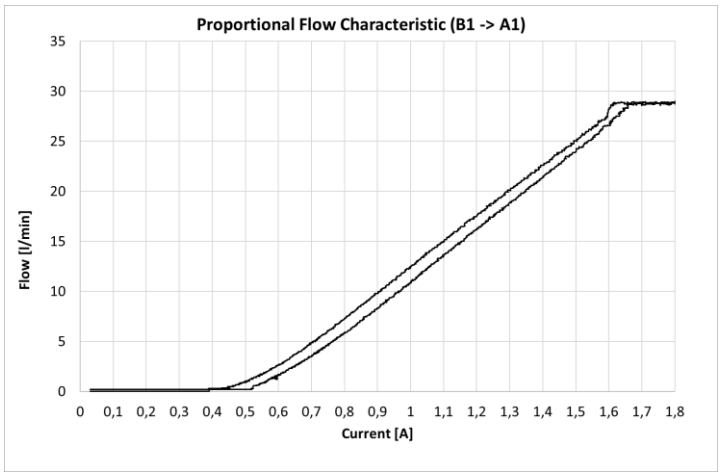

COILS

For unloading valve

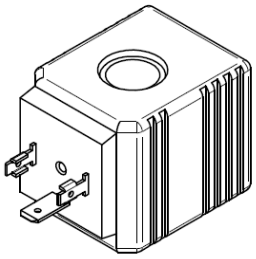

DIN 43650/ISO4400

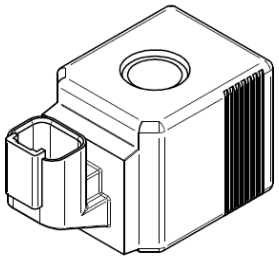

DEUTSCH DT04-2P-PL

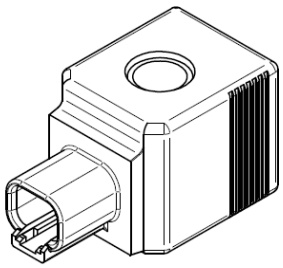

DEUTSCH DT04-2P-PP

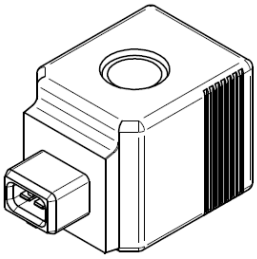

AMP JPT

Voltage:	12 VDC and 24 VDC
Nominal power:	19 W
Duty cycle:	ED100%
Ambient temperature range:	-30 / +80°C
Coil Thermal Class:	H (180°C)

VD12

For working section

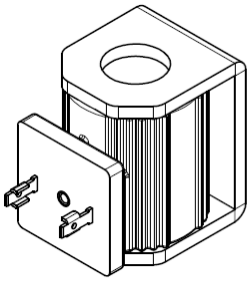

DIN 43650/ISO4400

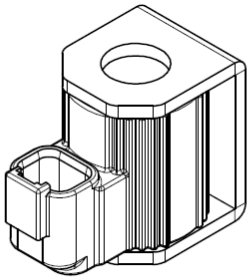

DEUTSCH DT04-2P-PL

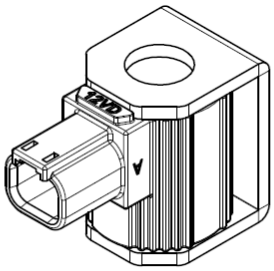

DEUTSCH DT04-2P-PP

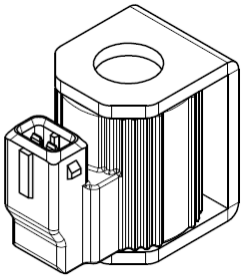

AMP JPT

Voltage:	12 VDC and 24 VDC
Nominal power:	20.5 W
Duty cycle:	ED100%
Ambient temperature range:	-40 / +105°C
Coil Thermal Class:	H (180°C)
Transient voltage suppressor:	P6KE33CA

For proportional flow regulator

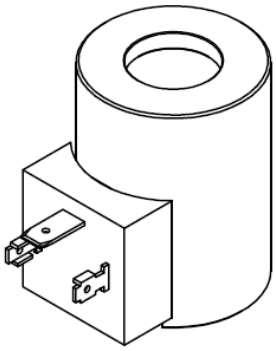

DIN 43650/ISO4400

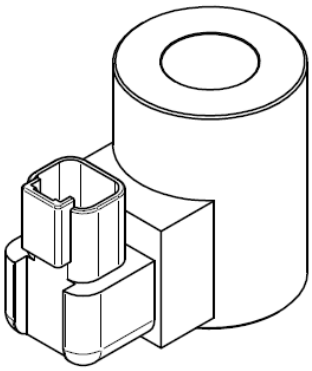

DEUTSCH DT04-2P-PL

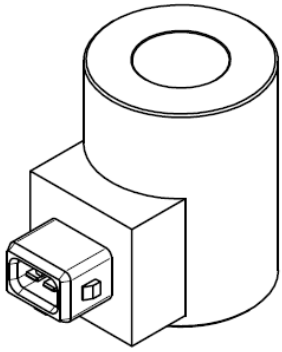

AMP JPT

Voltage:	12 VDC and 24 VDC
Nominal power:	21.6 W
Max control current:	**1.8A for 12VDC - 0.9A for 24VDC**
Ambient temperature range:	-20 / +80°C
Coil Thermal Class:	H (180°C)

AUXILIARY VALVES FUNCTIONS

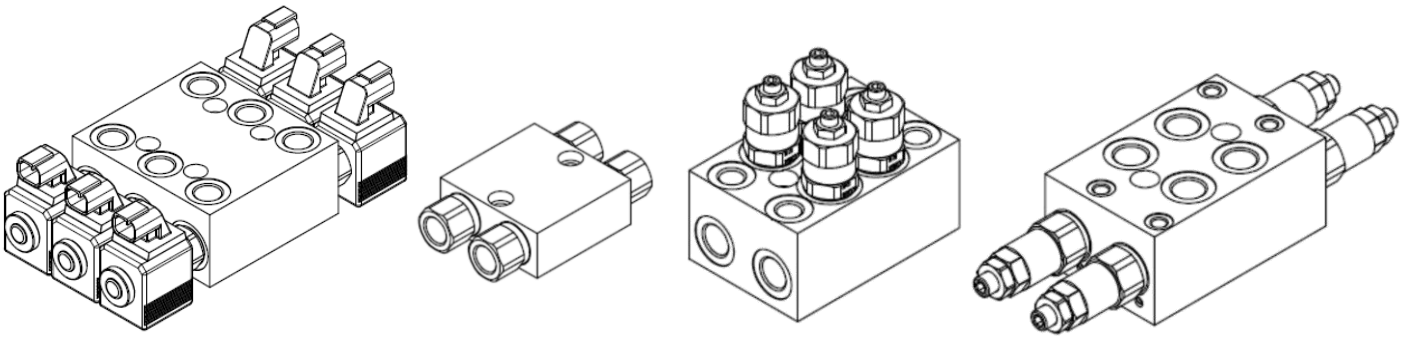

Available a wide range of auxiliary functions to flange on the working section.

- Anticavitation valves
- Pilot operated check valves
- Relief valves
- Relief and anticavitation valves
- Unloading valves
- Overcenter valves

Other options available on request

Some examples of auxiliary functions

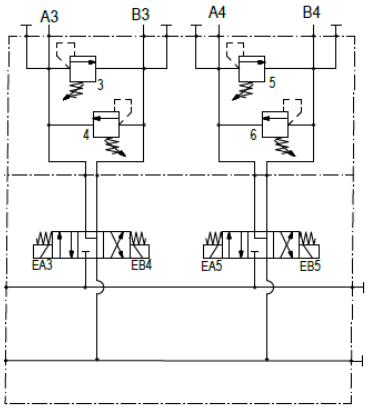

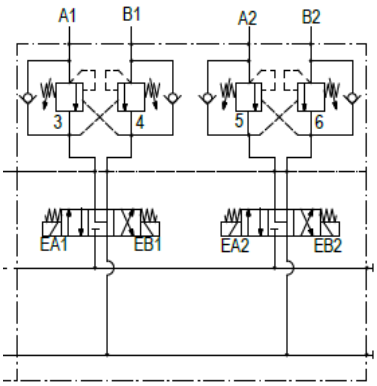

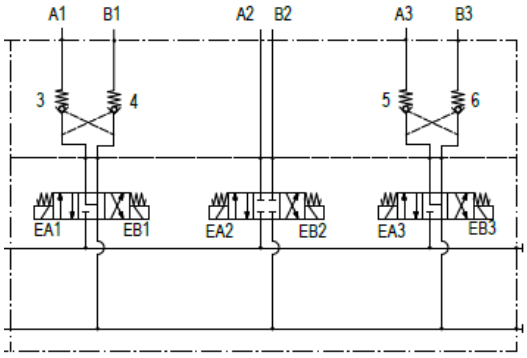

VD12 CUSTOMIZATIONS EXAMPLES

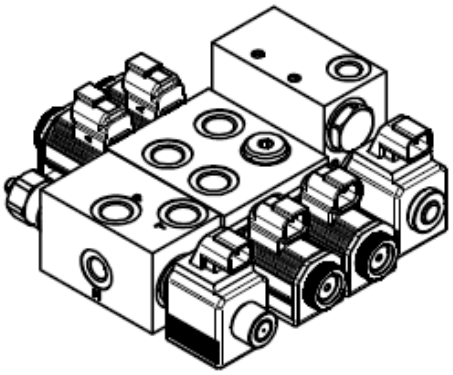

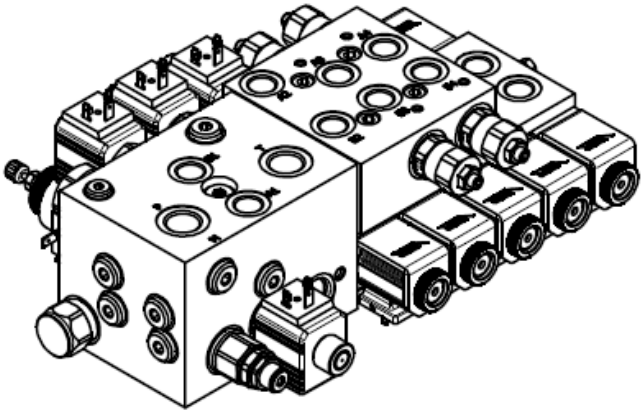

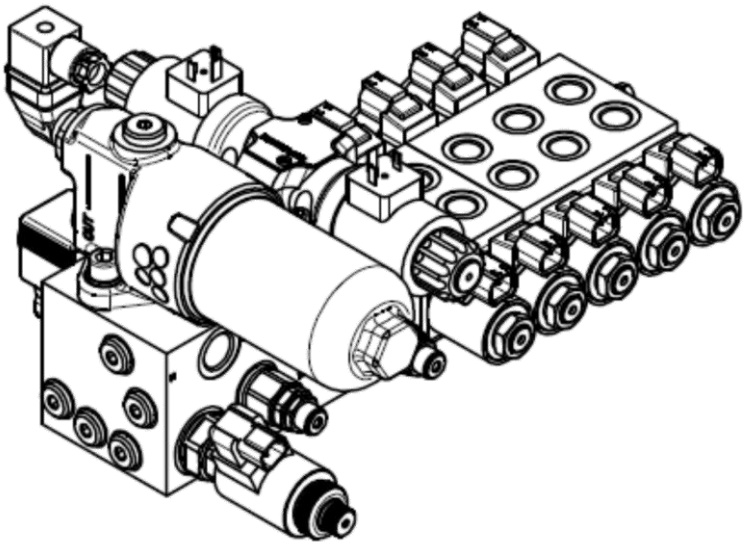

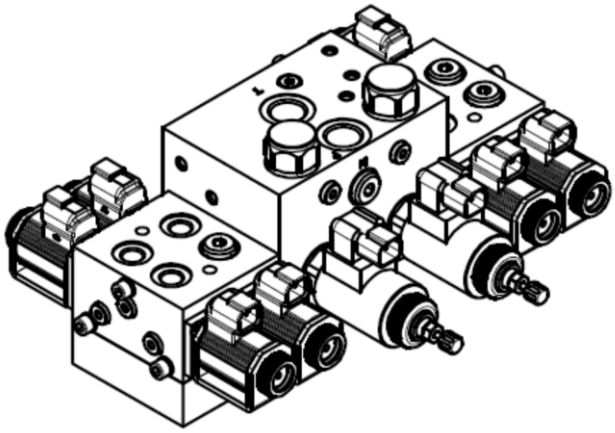

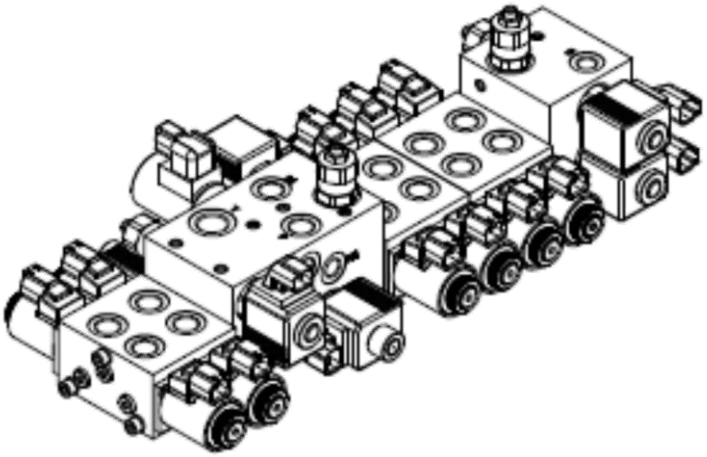

VBR S.r.l.
Via Roberto Sevardi, 8 42124 Reggio Emilia , Italy
P.IVA 09603980963
Tel .: +39 0522 1722340 _ Fax +39 0522 1722343
www.vbrhydraulics.com _ info@vbrhydraulics.com

Member of OMFB Hydraulic Components Group